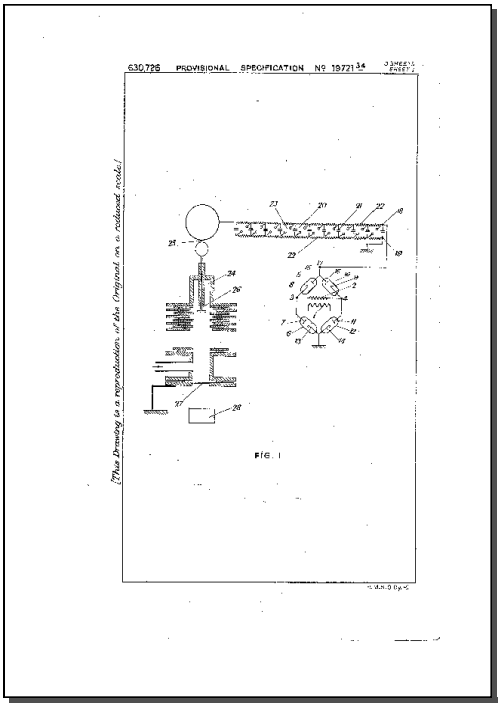

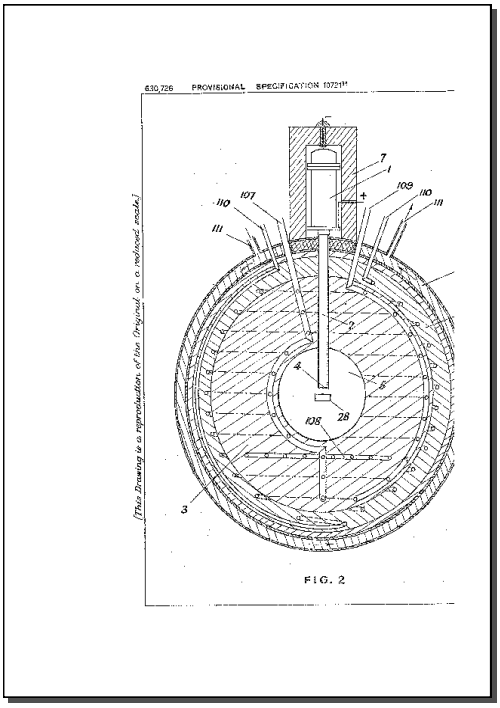

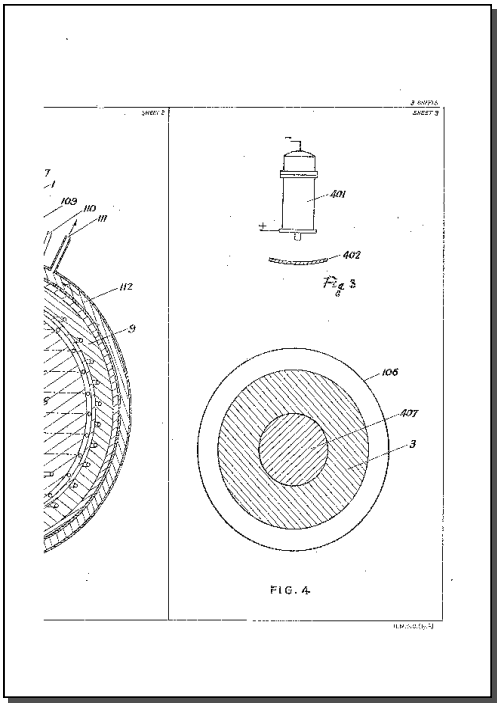

Drawing pages of GB630726 A

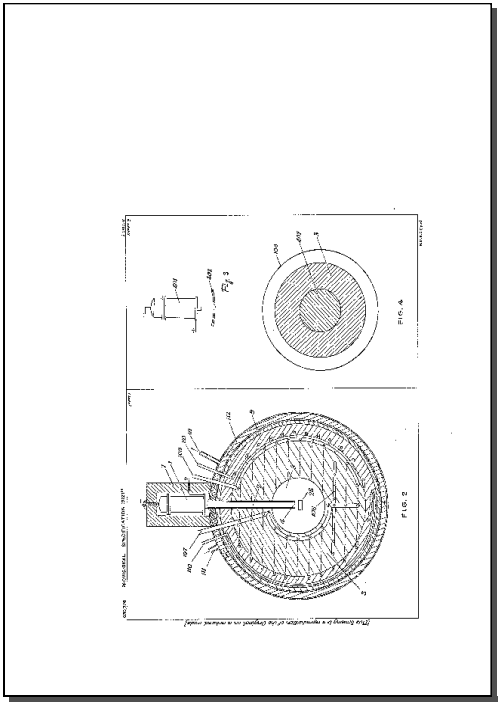

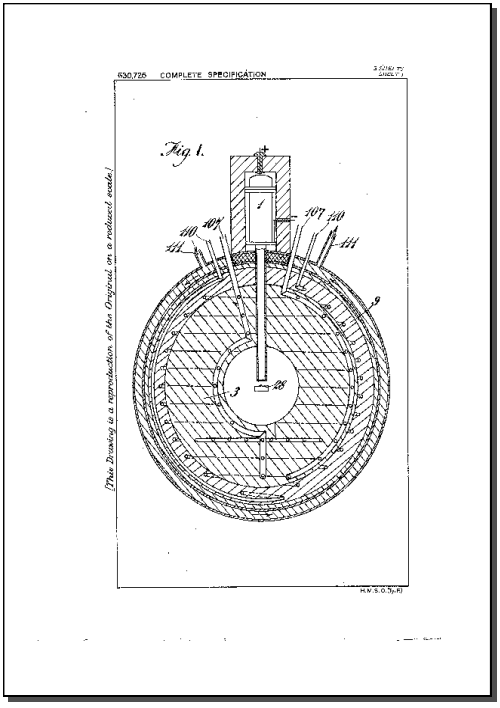

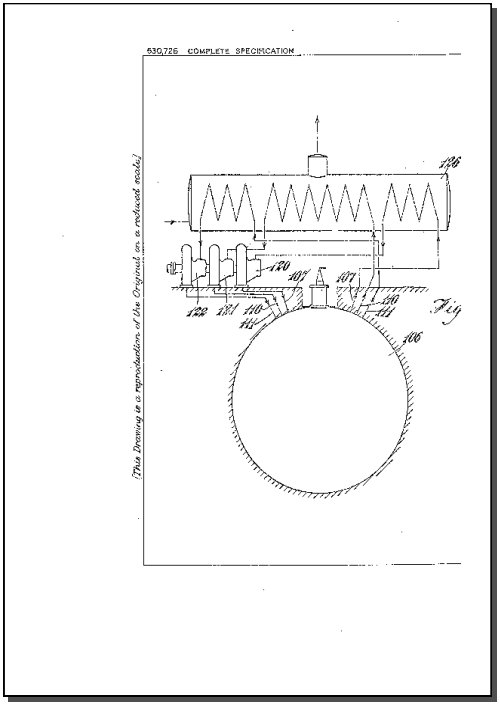

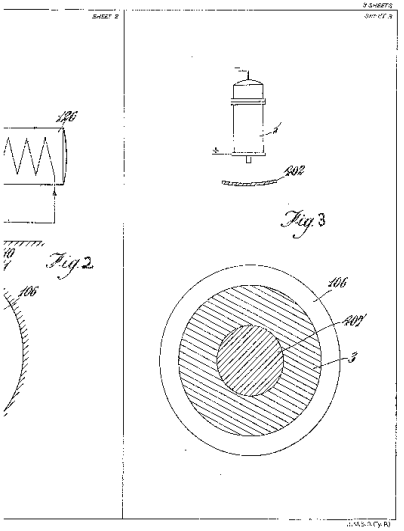

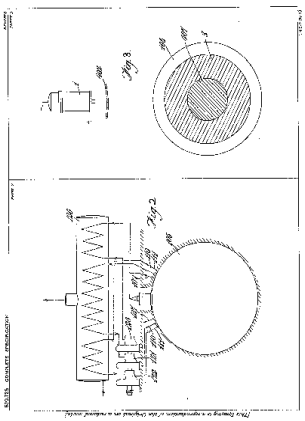

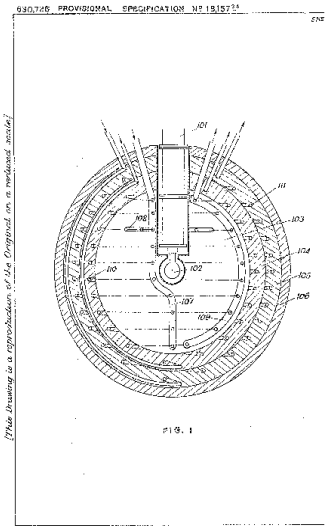
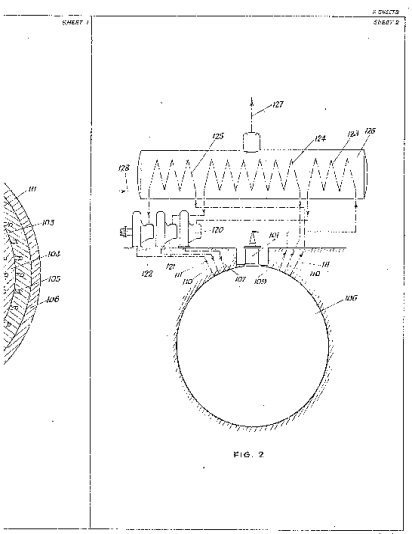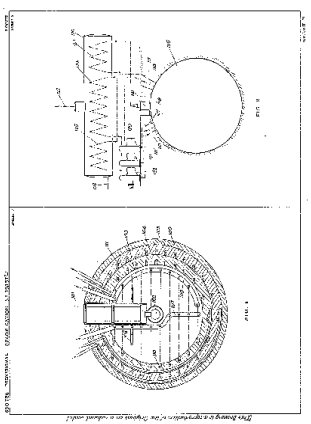
Drawing pages of GB630726 A